NO.	COMPONENTS	IMPEDANCE
1	SMA REVERSE POLARITY FEMALE FOR BULKHEAD	50 OHM
2	.085" TIN PLATED SEMI-RIGID CABLE (TIN PLATED RG405)	50 OHM
3	SMC MALE	50 OHM

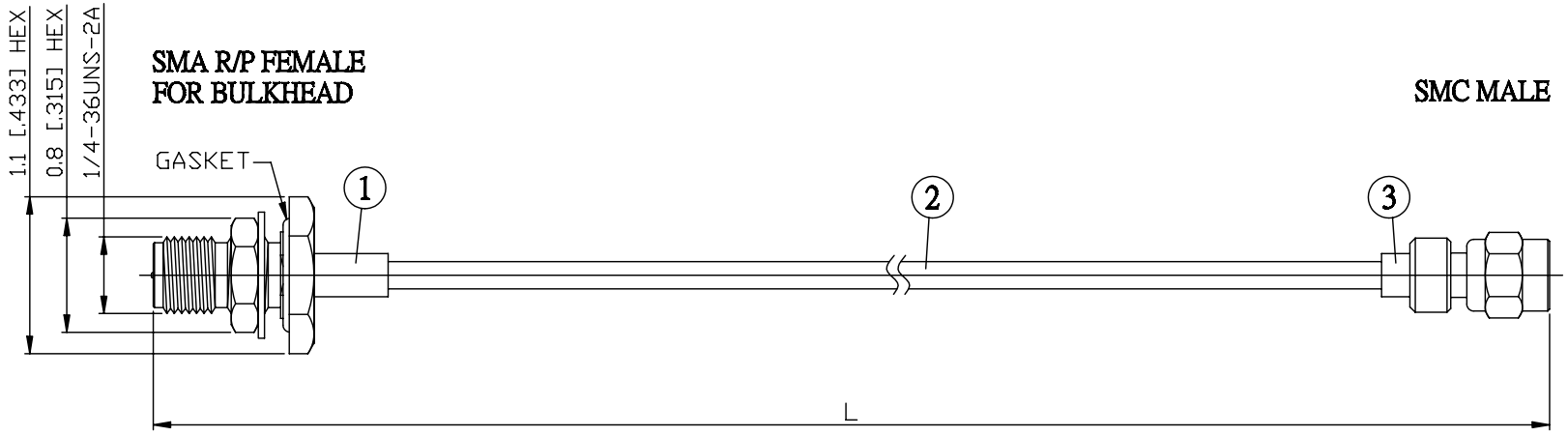

JYE BAO P/N	L CM (INCH)
A95MC30-85T-15	15 (5.906)
A95MC30-85T-30	30 (11.811)
A95MC30-85T-50	50 (19.685)
A95MC30-85T-100	100 (39.370)
A95MC30-85T-150	150 (59.055)
A95MC30-85T-200	200 (78.740)
A95MC30-85T-XXX	CUSTOM LENGTH IN CM

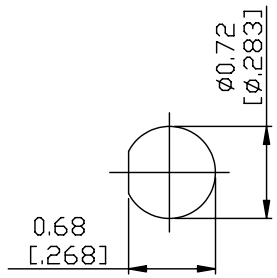

MOUNTING HOLE

LENGTH TOLERANCE IS ±1.5% OR ±10MM, WHICHEVER IS GREATER.

JYE BAO CO., LTD.

TAIPEI TAIWAN

DESCRIPTION: CABLE ASSEMBLY SMA R/P JACK FOR BULKHEAD TO SMC PLUG

JYE BAO DRAWING NO.: A95MC30-85T-XXX