NO.	COMPONENTS	IMPEDANCE
1	N MALE	50 OHM
2	5002	50 OHM
3	HEAT SHRINKING TUBE	

TEST LEAD WITH EXTRA STURDY CABLE / CONNECTOR CONNECTION.

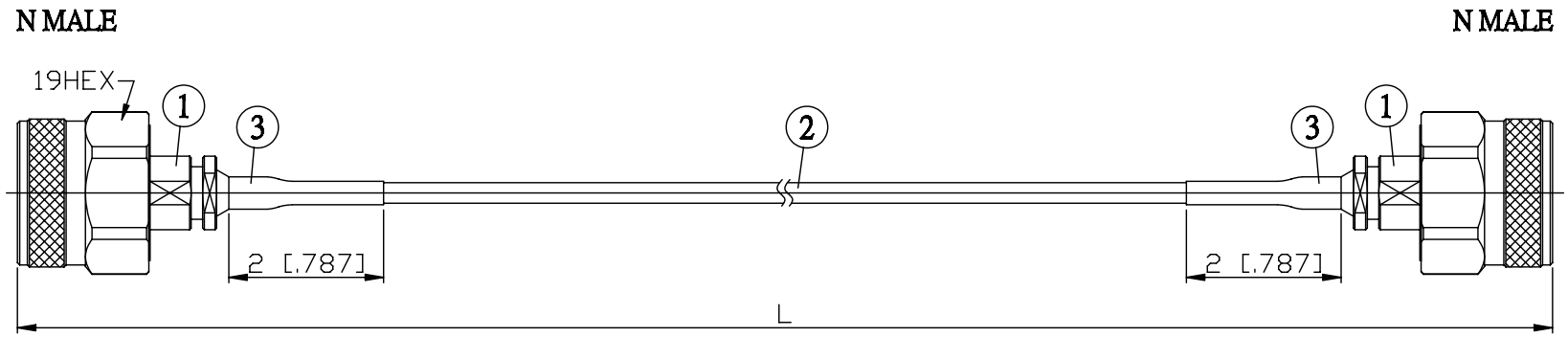

JYE BAO P/N	Freq. (GHz)	Max. Return Loss	L CM (INCH)
N30N30-5002-12G50	12.4	-20dB	50 (19.685)
N30N30-5002-12G100			100 (39.370)
N30N30-5002-12G150			150 (59.055)
N30N30-5002-12G200			200 (78.740)
N30N30-5002-12GXXX			CUSTOM LENGTH IN CM

LENGTH TOLERANCE IS ±1.5% OR ±10MM, WHICHEVER IS GREATER.

JYE BAO CO., LTD.

TAIPEI TAIWAN

DESCRIPTION

CABLE ASSEMBLY N PLUG TO N PLUG

JYE BAO DRAWING NO.

N30N30-5002-12GXXX